Thermo Scientific AquaSensors DataStick measurement system for universal plug & play

Product Specifications

Thermo Scientific AquaSensors DataStick

Suspended Solids Measurement System

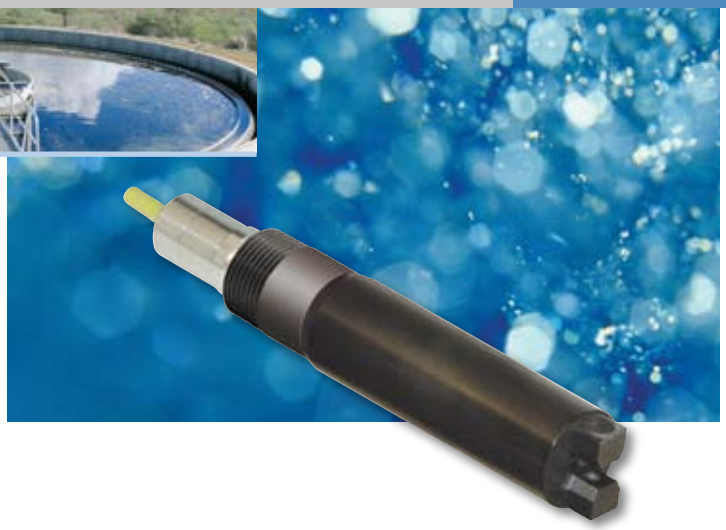

Markets/Applications

- Municipal/industrial wastewater
  - Primary & secondary clarifiers
  - Return activated sludge
  - Waste activated sludge
  - Mixed liquor
  - Aeration basins
  - Final effluent
- Municipal water
- Pulp and paper
- Dairy industry
- Mining industry
- Chemical process

AquaSensors Suspended Solids DataStick™

- 0 to 20,000 mg/L measurement range
- Fouling correction optics
- Rugged construction
- Local and remote configuration and diagnostics
- Temperature measurement included
- Direct data reporting
- Plug & play industrial communications adapters
- Versatile mounting

Connect this Suspended Solids (TSS) sensor directly to a PLC (Programmable Logic Controller) for seamless integration with industrial control systems. Use any computer to display data, calibrate and customize the measurement without an intermediate analyzer electronics box. This versatile system is ideal for monitoring all solids concentrations throughout a wastewater treatment plant.

Engineering Specifications

1. The Suspended Solids sensor shall measure suspended solids or TSS. The TSS measurement range shall be 0 to 20,000 mg/L. Resolution shall be 1.0 mg/L.
2. The TSS sensor will include fouling correction optics and will be capable of measuring 180 degree light to compensate 90 degree measurements.
3. The sensor shall be constructed of a polycarbonate material with exceptional chemical resistance and mechanical strength. This material shall enable the sensor to be installed in metal fittings without leakage usually caused by heating and cooling cycles when dissimilar materials are threaded together.
4. The sensor shall have interchangeable, precalibrated plug-in sensor heads and communications adapters that can be installed without powering down the system.
5. The sensor shall have 1 inch NPT threads to mount into a standard 2 inch union mounting, immersion or ball-float assembly.
6. The built-in electronics of the sensor shall be completely encapsulated and O-ring sealed for protection from moisture and humidity.
7. The sensor shall have a built-in pre-amplifier, universal signal conditioning electronics, universal engineering units conversion, and interactive communications with a host computer or display interface using one of several protocols including Modbus® RTU, DeviceNet, Profibus, CANopen or USB.
8. The sensor shall have an integral temperature sensor to measure temperature independently.
9. The sensor shall be the Thermo Scientific AquaSensors RT2 Suspended Solids DataStick.

Thermo Scientific DataStick Analytical System

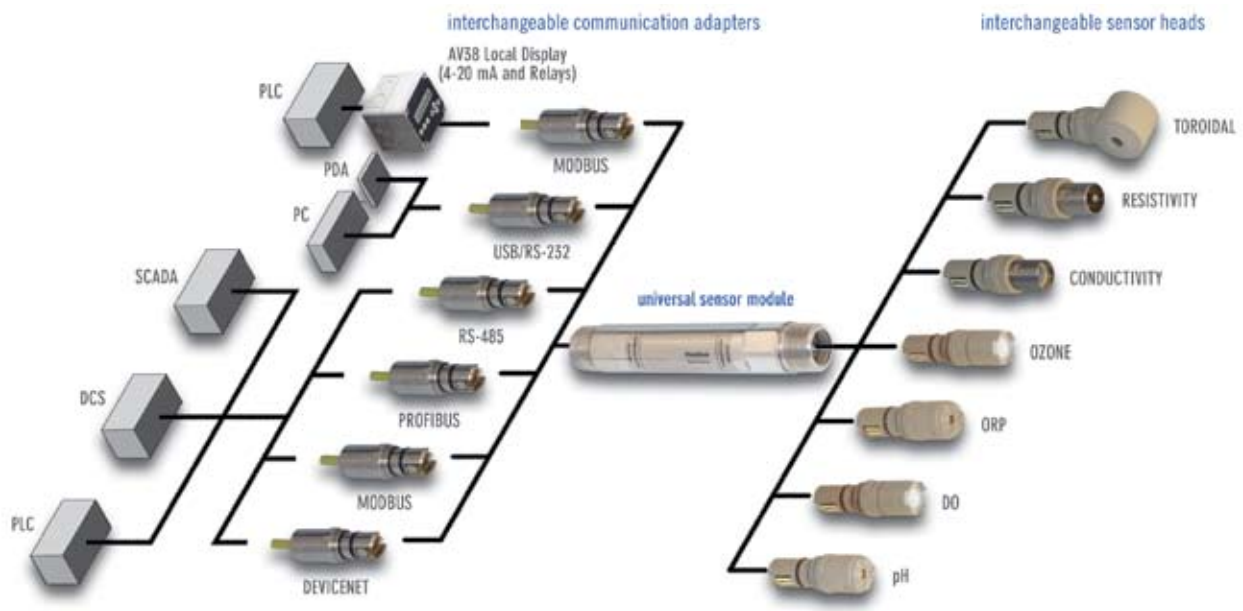

Key Components

Suspended Solids Sensor Head

Precalibrated for TSS and temperature. Can be plugged into any DataStick communications adapter for interactive measurement, calibration, configuration and diagnostics with industrial computers or AquaSensors AV38 local display.

Communications Adapter

Plugs into the DataStick to provide power and direct interactive communications with control systems.

Wash Head

In applications where the sensor head is quickly fouled with sediment, a wash head assembly can be attached. The head slips on the body of the sensor and the wash nozzle is aligned with the sensor fingers. A single screw is tightened to secure the wash head to the sensor. A hose is connected from the wash head to an air compressor or water source. Actuation is controlled by an AV38 wash relay that is programmed with a wash interval and duration.

Thermo Scientific AquaSensors Suspended Solids DataStick Data Sheet

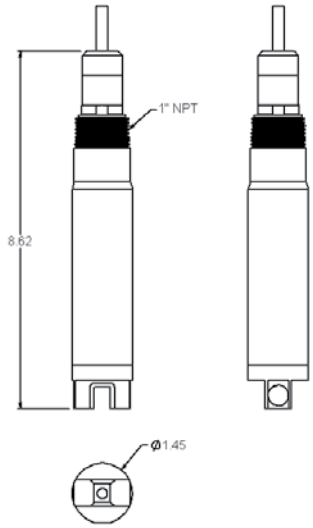

Sensor Mounting Accessories Include:

- Optional handrail mounting hardware assembly.
- Submersion extension pipe is available to install submersion style sensors.
- A stainless steel ball valve assembly with neoprene O-rings is offered for insertion style sensor installation. The assembly includes safety restrictor rods to limit sensor retraction, and position bolts to secure the fully inserted sensor.

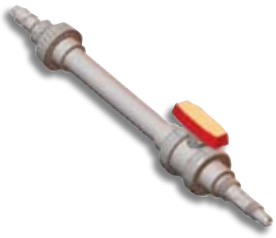

1.5 Inch Ball Valve

1.5 Inch Union Mounting

Ball Float Assembly

1 Inch Immersion Mounting with Junction Box
(7 foot extension is standard)

Specifications

Measurement System Performance†	**Range:** 0 to 20,000 mg/L (diatomaceous earth) **Resolution:** 1 mg/L **Step Response Time:** 90% in 15 seconds
Operational Environment	**Temperature Range:** –5 °C to 50 °C **Maximum Pressure:** 150 psig @ 50 °C **Maximum Flow Rate:** 10 ft/second
Power Requirements‡	**Voltage Range:** 10 to 30 VDC **Maximum Power:** 200 mW **Typical Power:** 120 mW
Construction	**Windows:** Quartz **Optical Topology:** 1 cm path lengths for measurement and reference. Detectors at 90 degrees and 180 degrees to source **O-rings:** Viton® (other materials available) **Sensor Head Material:** Polycarbonate **Weight** 1.2 lbs
Units of Measure	**Suspended Solids:** mg/L, ppm, % **Temperature Units:** °C, °F
Calibration††	**Sample:** 1 point **Zero:** 1 point **Temperature:** 1 point
Measurement Modes	**Measurement Units:** detected at 90 degrees and 180 degrees **Temperature:** Automatic from –5 °C to 50 °C
Other Configuration Options	**Sensor Filter:** 0 to 100 seconds **Temperature Filter:** 0 to 100 seconds
Approvals and Ratings	**Immunity & Emissions:** CE Certified 89/336/EEC: CISPER 11, EN61000 (-4-2,-4-3,-4-4,-4-6, 4-8) **Safety:** cULus Listed; 367G E303570 **Hazardous Locations:** Haz Loc Class 1, Division 2, Groups A, B, C, D. Max Ambient 50 °C

† Note: Typical at 25 °C Performance unaffected by cable length
‡ Note: Class II DC power supply required
†† Note: Turbidity and Temperature are precalibrated at the factory

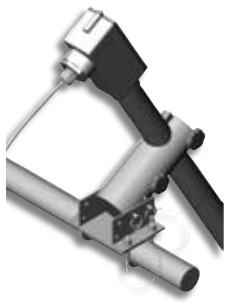

Hand Rail Mounting Assembly

AV38 Local Display/Controller

2 line display and 7 key navigation. Data reporting with up to 2 current outputs. 2 Form C relays. Digital communications.

Thermo Scientific AquaSensors Suspended Solids DataStick

- Global support — with experience that comes from supporting our customers for over 35 years throughout the world, our water quality specialists and customer support teams offer a quick, thorough and professional response to any problem encountered.
- Focus on user benefits — we work closely with you to define your needs, and ensure you are using the monitor in a way that improves your bottom line. For more information, contact your local water quality specialists, or visit www.thermo.com/processwater.

Suspended Solids DataStick Ordering Information

Part No.	Description
RT-b-x-y-z	**DataStick and Communications**
Measurement Mode (b)	**2** = Suspended Solids
Back-Body and Communications Material (x)	**1** = 316 Stainless Steel **2** = CPVC
Communications (y)	**4** = Modbus RTU **5** = DeviceNet **6** = CANopen **7** = Ethernet **8** = USB
Cable Length (z)	**1** = 10 feet **2** = 20 feet **3** = 30 feet

Accessories Ordering Information

Part No.	Description
MH1222	Wash Head Assembly
Local Display/Controller Interface	
AV38	¼ DIN, Outputs, Relays, Digital Communications Options
Mounting Hardware	
MH1042-RT	1.5 Inch Union Mounting, CPVC
MH1041-RT	1.5 Inch Union Mounting, 316 Stainless Steel
MH1112	1.5 Inch Ball Valve, CPVC, Low Pressure
MH1111	1.5 Inch Ball Valve, 316 SS, Low Pressure
MH1122	1.5 Inch Ball Valve, CPVC, High Pressure
MH1121	1.5 Inch Ball Valve, 316 SS, High Pressure
MH1042	Hand Rail Mounting Assembly, Swivel/ Immersion, PVC
MH1052	Hand Rail Mounting Assembly, Swivel/Immersion with Ball Float
MH3083	1 Inch Immersion Mounting with Junction Box, PVC (7 foot extension is standard)

Consult factory for additional configurations and accessories.

©2008 Thermo Fisher Scientific Inc. All rights reserved. ® Viton is a registered trademark of E. I. Du Pont De Nemours & Company. Modbus is a registered trademark of Schneider Automation, Inc. All other trademarks are the property of Thermo Fisher Scientific Inc. and its subsidiaries.

S-ASDSSLDS-E 1108 RevA

Environmental Instruments
Water Analysis Instruments

North America
166 Cummings Center
Beverly, MA 01915 USA
Toll Free: 1-800-225-1480
Tel: 1-978-232-6000
Dom. Fax: 1-978-232-6015
Int'l Fax: 978-232-6031

Europe
P.O. Box 254, 3860 AG Nijkerk
Wallerstraat 125K, 3862 BN
Nijkerk, Netherlands
Tel: (31) 033-2463887
Fax: (31) 033-2460832

Asia Pacific
Blk 55, Ayer Rajah Crescent
#04-16/24, Singapore 139949
Tel: 65-6778-6876
Fax: 65-6773-0836

www.thermo.com/water

Thermo SCIENTIFIC